Warren Water Pollution Control 2021 End of Year Update

Edward J. Haller, Director

WPC has three areas of responsibility: Treatment Plant, Sanitary Sewers, Street Storm Drainage. Here is a look back on things accomplished by this Department in 2021, a look forward to the plans for 2022, and some issues of interest for Water Pollution Control.

2021 Accomplishments

Plant: **Phase 1 Plant Refurbishment** started by A.P. O'Horo including a new Septage Receiving Station, new raw influent screens, rebuilding #4 & #5 Primary Settling Tanks, and rebuilding the four final clarifiers. Work is expected to be completed Q1 2023.

Sanitary Sewers: New **High Street Sanitary Sewer** was installed by contractor S.E.T., Inc.

- The **Main Pump Station and South Leavitt Pump Station** were both started to be renovated by Mike Coats Construction as part of the Phase 1 Plant & Pump Station Refurbishment. Construction is expected to be completed Q1 2023.
- A **New Wastewater Force Main** is being installed from the Main Pump Station to the Water Pollution Control Facility by Woodford Excavating expected to be done Q1 2023.

Street Storm Drainage: Seven **Ward Meetings** held (2/4/21 – 4/29/21) to inform residents and also **generated 12 potential projects** to improve Warren street storm drainage.

- Reviewed Commercial Construction projects for **Storm Water Compliance.**
- Started EPA-Required **Storm Water Ordinance** Review.

Financial: **Lordstown Sewer Rates** settled through mediation bringing the rates Lordstown pays Warren from 75% to 100% of Warren's Inside Rate gradually over 10 years.

- **Warren Sewer Rates** were approved to increase 6% per year for 6 years to cover the remaining cost of currently needed Plant & Sanitary Sewer work.

2022 Plans

Plant: **Phase 1 Plant Refurbishment** construction will continue by contractor A.P. O'Horo.

- **Phase 2 Design** will start Q1 2022. Includes Grit Handling replacement, Aeration Tank improvements, Blower replacement, Disinfection Contact Tank refurbishment (2) & installation (1), new Gravity Thickeners (2), and a new Emergency Generator.

Sanitary Sewers: Construction work will continue on **Main & South Leavitt Pump Stations**, and the **New Force Main** as part of the Phase 1 Plant & Pump Station Refurbishment.

- **Parkman Road Pump Station** installation of two pumps & replacement bar screen.
- Parkman Road and **Youngstown Road Pump Stations** full restoration design.
- EPA-Required **Sewer Investigations** & Updating the **Sanitary Sewer Model**.
- Preparing to bid the **Cleaning of Sanitary Sewers** of calcium and difficult sediments.
- **Niles Road Sewer Reconfiguration**: start design Q1 2022 & start construction Q4 2022.

Street Storm Drainage: Start **Storm Water Master Planning** Q1 2022**.**

- Complete EPA-Required **Storm Water Ordinance Updates** Q2 2022**.**
- Review new Commercial Construction projects for **Storm Water Compliance.**
- Update **Storm Water System Mapping & Start Storm Water System Model.**

Storm Water Information

On August 25, 2021 the local news reported that 4.7 inches of rain fell on many NE Warren Neighborhoods in only a few hours, the equivalent of a 100-Year storm, creating a great deal of street, yard and basement flooding for homes that ordinarily do not normally have such issues. Many questions and concerns were raised in the weeks following that event. I would like to document here some of the answers.

Storm water that gets into the sanitary sewers is called Inflow & Infiltration (I&I). Our recent study of the Warren sanitary sewer system revealed that about 70% of the Warren I&I comes from Warren homes. Most Warren homes have two (2) primary sources for stormwater to get into the sanitary sewers: House Down Spouts & Footer Drains.

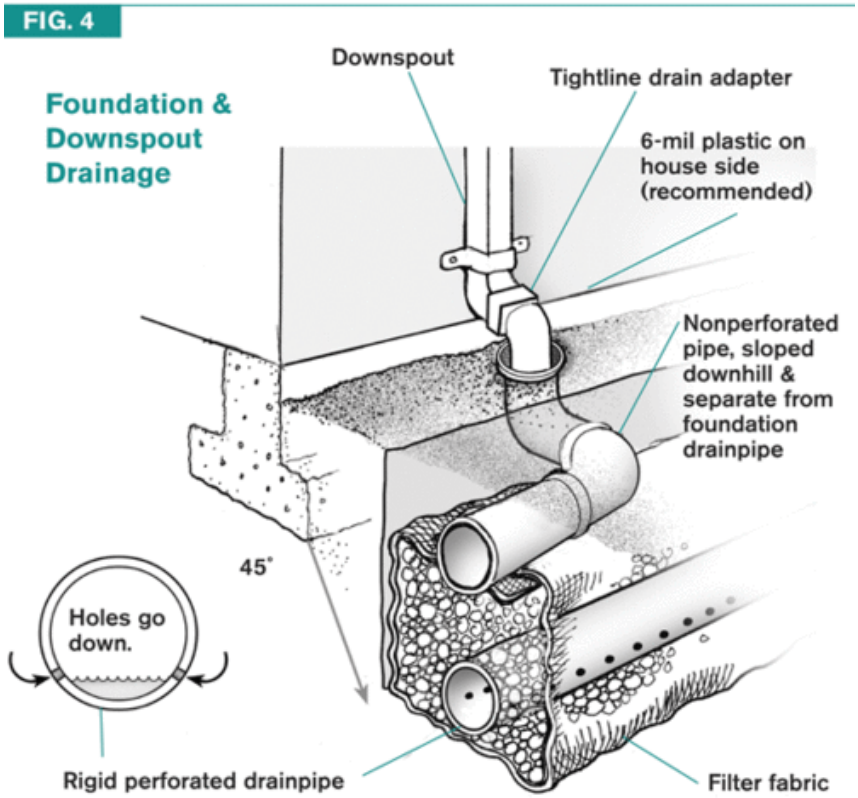

The first source comes from the rain that falls on the roofs of homes and shows up through the gutters and **Down Spouts**.

The second source is the home's **Footer Drains**. Around the foundation of most homes is a perforated pipe to collect the rain water that goes into the ground around your home.

97% of homes in Warren were built with the footer drains connected to the sanitary sewers.

Warren sewers were originally built as combined sewers with both sanitary water and storm water in one pipe. At that time, there were many places all around Warren to allow any surplus overflow of combined sewage to flow to the Mahoning River when it rained.

In the 1990's Warren installed new storm sewers to take the street storm water directly to the River. From then on, dedicated sanitary sewers brought flows from Warren Homes directly to the wastewater treatment plant and all the River overflow locations were closed. Most Warren homes were built with one (1) combined lateral to take sanitary and storm flow to one sewer. That means that most storm flow from homes goes into the sanitary sewer. The extra rainwater from all these homes is sometimes too much flow to get through the sanitary sewers and backs the flow into basements causing flooding.

Many residents have reduced home I&I contribution by extending their downspouts at least six (6) feet away from the foundation. That keeps some rain water from going into the sanitary sewers.

Unfortunately that is only part of the home contribution. Unless a resident installs a sump pump to take the flow from their home's footer drains and sends that rain water to a storm sewer, that storm water from footer drains will continue to increase potential basement backups.

Let's review:

- Warren homes contribute 70% of the rain water that gets into sanitary sewers.
- Extra rain water in sanitary sewers cause basement sewage backups.
- Two sources of home rain water contribution to sanitary sewers are down spouts & footer drains.
- Down Spout contribution can be eliminated by extending six feet away from house.
- Footer Drain contribution can be eliminated by installing a sump pump with discharge at least six feet away from the house, preferably to a storm sewer.

Invitation

If you have any questions about the work we are doing or the projects we have planned feel free to call me at 330 841-2765 or email me.